Elfatherm E6

Heating controller

Operating and Installation Instructions

Please follow the safety information and read through these Instructions carefully before placing the system into operation.

General

⚠ This attention symbol is used in these Instructions to point out risks and dangers to the life and limb of persons and/or damage to property.

Power connection regulations

Please note the connection conditions specified by your local electrical power supply utility and the VDE regulations. Your heating control system may be installed and serviced only by appropriately authorised specialists.

⚠ If the system is not installed professionally, this will involve a risk to life and limb.

Warranty conditions

If the system is not installed, commissioned, serviced and repaired professionally, this will render the manufacturer's warranty null and void.

Declaration of conformity

CE

We, as the manufacturer, hereby declare that the

Elfatherm E6

series complies with the essential requirements of the following Standards if the applicable installation standards and manufacturer's instructions are followed:

- 89/336/EEC
- 73/23/EEC
- EN 50081-1
- EN 50082-2
- EN 60 730

G. Kromschröder AG
Comfort Controls

Hameln, 03.04.1998

Descriptions of operating procedures

Certain operating sequences are explained using examples. The statuses of the controller are illustrated or described as boxes. The following status can be accessed by operating the operating controls as shown or by performing the operation described.

Key symbols:

Press Programming key (Selection/Entry confirmation)

Operate rotary knob

Notes

! Important information is highlighted with an exclamation mark.

! The Operating Instructions describe the full-complement version of the controller. This means that certain sections of what is said may not be relevant to your particular controller.

General **2**
Safety information **2**
General 2
Power connection regulations 2
Warranty conditions 2
Declaration of conformity 2
Descriptions of operating procedures 2
Notes 2
Contents **3**
Variants **4**
Operation **4**
Operating modes **4**
Mode-selector switch 5
⏻ Frost-protection mode 5
◷ Automatic mode 5
☼ Heating mode 5
☽ Reduced mode 6
Summer mode 6
Service mode 6
Manual mode (15 min) 6
Programming **6**
Settings 6
Basic functions 7
Display 9
Heating program **10**
Heating program level 10
Entry of the heating programs 10
Recommended procedure: 10
Selection of a heating program 10
Switching times **14**
Parameter level **16**
Explanatory information **18**
Definitions **18**
Flow resp. boiler temperature 18
Frost-protection control 18
Weather-dependent control 18
Room sensor influence 18
Room temperature 19
Reduced temperature 19
Hot-water generation 19
One-off hot water 19
Heat slope 19
Holiday 20
Heating program 20
Warm-up optimisation 21
Maximum time advance 21
Circulation pump control 21
Outside temperature delay 21
Delayed pump switch-off 22
Pump blocking protection 22
EEPROM check 22
Error messages **23**
RESET-Function 23
For the fitter **24**
Parameters **24**
Technician level 24
Explanatory information 27
System bus **31**
The heating installation system CXE 31
Bus ID 31
Accessories **31**
DCF receiver 32
PC 32
Maximum delimiter 33
Telephone switch 33
Sensors **33**
Electrical connection **35**
System diagram 35
E6.0231/E6.0631 36
Connection diagram 36
E6.0321 37
Connection diagram 37
Installation **38**
Technical data **39**
Sensor resistances 39
Technical data 39

Variants

E6 has been designed for control of heating systems. The various versions allow low-cost, optimum matching to the heating system. The integrated bus interface allows all E6 versions to be integrated in controlled heating systems with up to 15 heating circuits. The units configure themselves automatically when commissioned since they detect the sensors connected. The circulation pump is controlled dependent on demand on all versions. Dynamic, load-dependent burner control hysteresis allows convenient and comfortable heating whilst the boiler control minimises the number of burner starts.

Elfatherm E6.0231

- Control of one two-stage boiler or control of two single-stage boilers
- Hot-water generation
- Additional, time-controlled relay (e.g. circulation pump)
- Additional, temperature-controlled relay (e.g. temperature increase of return flow; see Chapter Explanatory information)
- CAN bus interface implemented

Controller E6.0321

- Control of one boiler
- Control of one mixer circuit
- Hot-water generation
- Additional, temperature-controlled relay (e.g. temperature increase of return flow; see Chapter Explanatory information)
- CAN bus interface implemented

Controller E6.0631

- Control of one two-stage boiler or control of two single-stage boilers
- Control of two mixer circuits
- Hot-water generation
- Additional, time-controlled relay (e.g. circulation pump)
- Additional, temperature-controlled relay (e.g. temperature increase of return flow; see Chapter Explanatory information)
- CAN bus interface implemented

Mixer module E6.1111

- Control of two mixer circuits
- Entry of the hot-water times and the desired hot-water temperature[1]
- Additional, time-controlled relay (e.g. circulation pump)
- CAN bus interface implemented

[1] The hot-water enable times and the desired hot-water temperature are enabled only on the E6 with the heating circuit with bus ID 0 or 1.

Operating modes

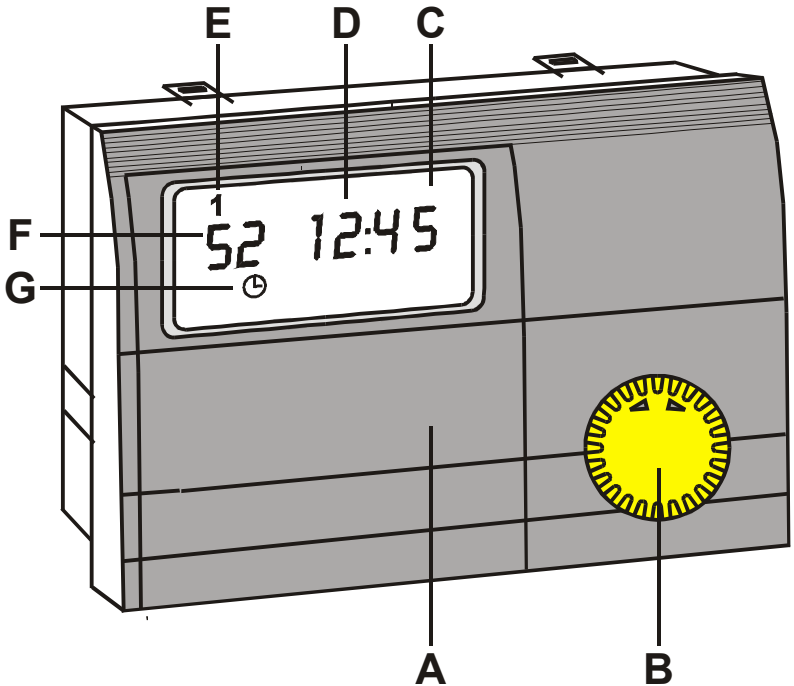

A Hinged control panel cover
B Mode-selector switch
C Display
D Time
E Weekday
F Boiler temperature
G Current setting of the mode-selector switch (Automatic mode)

Mode-selector switch

If the hinged control panel cover is closed, the rotary knob serves as the mode-selector switch. The current operating mode is shown as a symbol on the display.

! If the operating mode is changed, the new setting time takes effect after 5 seconds.

⏻ Frost-protection mode

The controller is switched off.
If the actual temperature drops below the frost-protection temperature, the controller operates continuously in frost-protection mode.

◷ Automatic mode

Automatic change of the desired room temperatures at the programmed switching times.

☼ Heating mode

The controller constantly stabilises the system to the desired room temperature 1.

Reduced mode

The controller operates constantly in Economy mode and stabilises the system to the set economy temperature.

Summer mode

(Hot-water operation)
The controller stabilises only the hot-water temperature. The heating system is switched off continuously (Frost-protection mode).

Service mode

All pumps and burners are switched on. The mixers are moved to position "open".

Manual mode (15 min)

(only via Manual/Automatic switch /)
All pumps and burners are switched on. The mixers are not controlled. This means that the mixers must be adjusted manually.

Settings

When the hinged front cover is opened, the controller switches automatically to Information and Programming mode.

All entries can be made on the basis of the same principle:

1. Open the hinged cover on the front of the controller -> Controller switches to INFO mode. The (down) arrow points to the first basic function (Room temperature 1).
2. The required basic function is selected with the rotary knob . The basic functions cover adjustable parameters or other operating levels.
3. Activate the selected basic function with the Programming key .
4. If you press key and have selected a lower operating level -> continue at Point 2!
5. If you press key and have selected a setting, the controller changes to Programming mode (the red lamp/programming indicator lights).
6. The setting can be changed with the rotary knob .
7. Press key again; this saves the new value.
8. If you close the hinged cover before pressing key , this quits Programming mode. The controller switches to the standard display (boiler temperature and time). The changed value is not saved.

! You can branch up to the next operating level by pressing key and selecting the "RETURN" function (=> "End").

Programming

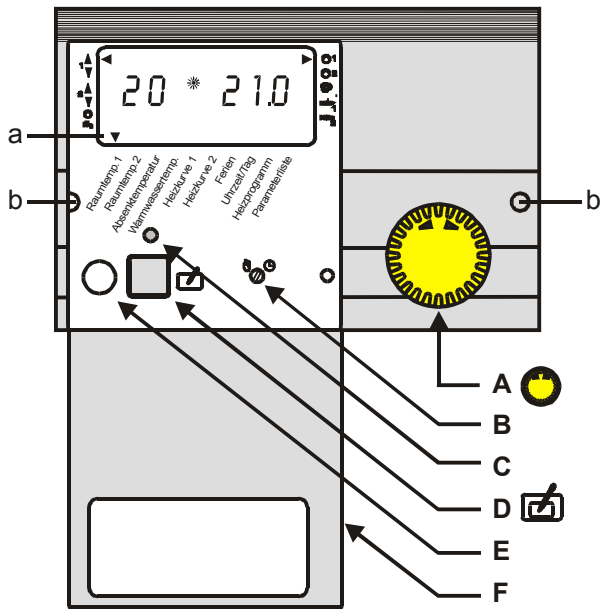

A Rotary knob (Select settings / Adjust values)
B Manual/Automatic switch (RESET)
C Programming indicator (red lamp)
D Programming key
E Optical interface (optional)
F Hinged control panel cover (open)

a Basic functions arrow
b Unlocking holes

Basic functions

The basic functions can be selected with the rotary knob after opening the hinged front cover.

- **Room temperature 1**

Display of the current room temperature (left) and the related desired value (right) for heating circuit 1 and the symbol for the heating circuit status.
- Key (red lamp lights)
- Change the desired temperature with
- Save the value with

- **Room temperature 2**

Display of the current room temperature (left) and the related desired value (right) for heating circuit 2 and the symbol for the heating circuit status.
- Key (red lamp lights)
- Change the desired temperature with
- Save the value with

- **Reduced temperature**

Display of the economy temperature for the entire heating system (right).
- Key (red lamp lights)
- Change the economy temperature with

- Save the value with

- **Hot-water temperature**

Display of the current storage tank temperature (left) and the related desired value for hot-water generation (right).
- Key (red lamp lights)
- Change the desired temperature with
- Save the value with

- **Heat slope 1**

Display of the heat slope gradient for heating circuit 1 (right).
- Key (red lamp lights)
- Change the heat slope with
- Save the value with

- **Heat slope 2**

Display of the heat slope gradient for heating circuit 2 (right).
- Key (red lamp lights)
- Change the heat slope with
- Save the value with

- **Holiday**

Display of the programmed holiday period in days for the entire heating system (right).
- Key (red lamp lights)
- Enter the holiday period with
- Save the value with

- **Time/Day**

Display of the current time (right) and the weekday. The weekday is displayed by a digit at the top of the display (Monday = 1, ..., Sunday = 7).
- Key (red lamp lights)
- Change the time with
- Key (red lamp continues to light)
- Change the weekday with
- Save the weekday and the time with

- **Heating program**

Level for programming and selecting the current heating programs (see corresponding chapter).

- **Parameter list**

Level for entry of further settings for the heating system.
- Press key
- Select the setting with . Display of the system values (right) with the related parameter number (left)
-> see Parameter list.
- Key (red lamp lights)
- Change the value with
- Save the value with

! If a parameter is not present in the system, this is either indicated by dashes on the display (----) or the parameter is masked or cannot be selected with the rotary knob .

! Technician level (as of parameter No. 20 of the parameter list) contains the code No. of the stored parameters (see Chapter Technician level).

Display

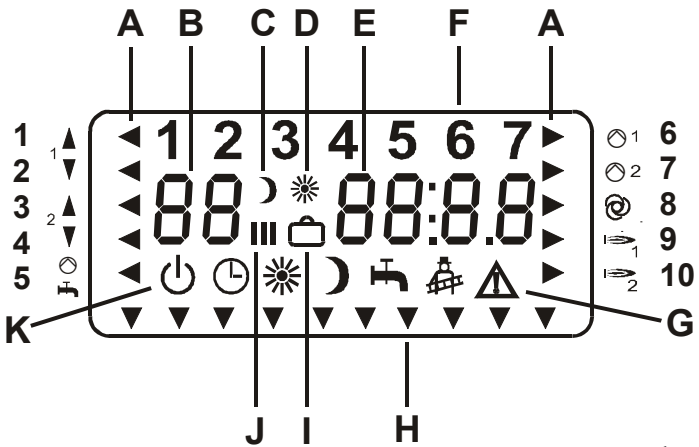

A Function display
(arrow points to symbol)

1 Mixer 1 open
2 Mixer 1 closed
3 Mixer 2 open
4 Mixer 2 closed
5 Storage tank pump running
6 Heating circuit pump 1 running
7 Heating circuit pump 2 running
8 Circulation pump running
9 Burner 1 / Stage 1
10 Burner 2 / Stage 2

B Parameter number / Temperature display
C Reduced mode / Switch-off time
D Heating mode / Switch-on time
E Parameter values (temperatures, gradients, times, On/Off [1/0], Error numbers, End)
F Weekday display (1-7)
G Warning/Fault display
H Arrow points to basic function
I Holiday mode
J Heating time (1-3)
K Current operating mode

Basic function Room temperature

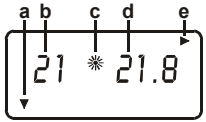

a Arrow points to basic function
b Room temperature, heating circuit 1
c Heating mode
d Desired room temperature value
e Heating circuit pump 1 running
f Weekday
g Time
h Parameter number
i Parameter setting

Basic function Time/Day

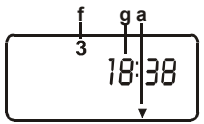

Basic function Parameter list

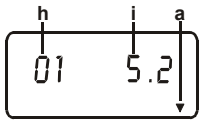

Heating program level

Two heating programs between which the user can constantly select can be entered for each heating circuit. After opening the hinged control panel cover, you can select basic function Heating program with the rotary knob. You can move to Entry level with the Programming key.

Entry of the heating programs

1) **Heating program:**
   Choose the heating program for entry of the switching times (for heating circuits I or II, hot water or the circulation pump) with the rotary knob (illustration).
2) Press key.
3) **Weekday/Period:**
   Choose the weekday or the period for which the switching times are to be defined with the rotary knob (illustration).
4) Press key.
5) **Switching time:**
   Choose the switching time to be changed with the rotary knob (illustration).
6) Press key (red lamp lights).
7) Adjust the switching time with the rotary knob.
8) Save with key .
9) Return (higher level):
   Choose "End" with the rotary knob. Press key.

! If switching time entry in blocks (Mo-Fr, Sa-Su, Mo-Su) is activated, the current switching times of the first day of the block are displayed. The display does not show the switching times of the entire block. If you activate a switching time with the Programming key (red lamp lights) and then save the value by pressing the Programming key again, all switching values in the block are overwritten by the switching values of the first day in the block!

Recommended procedure:

1) Enter all heating times for the period Monday to Sunday (overwrite all switching times of the week!).
2) Enter different switching times for the corresponding days.

Selection of a heating program

1) Select function 03 resp. 06 with the rotary knob at Heating program level.
2) Press key.
3) Choose heating program 1 or 2 with the rotary knob.
4) Press key. The selected heating program is now operative in Automatic mode.

Heating program level

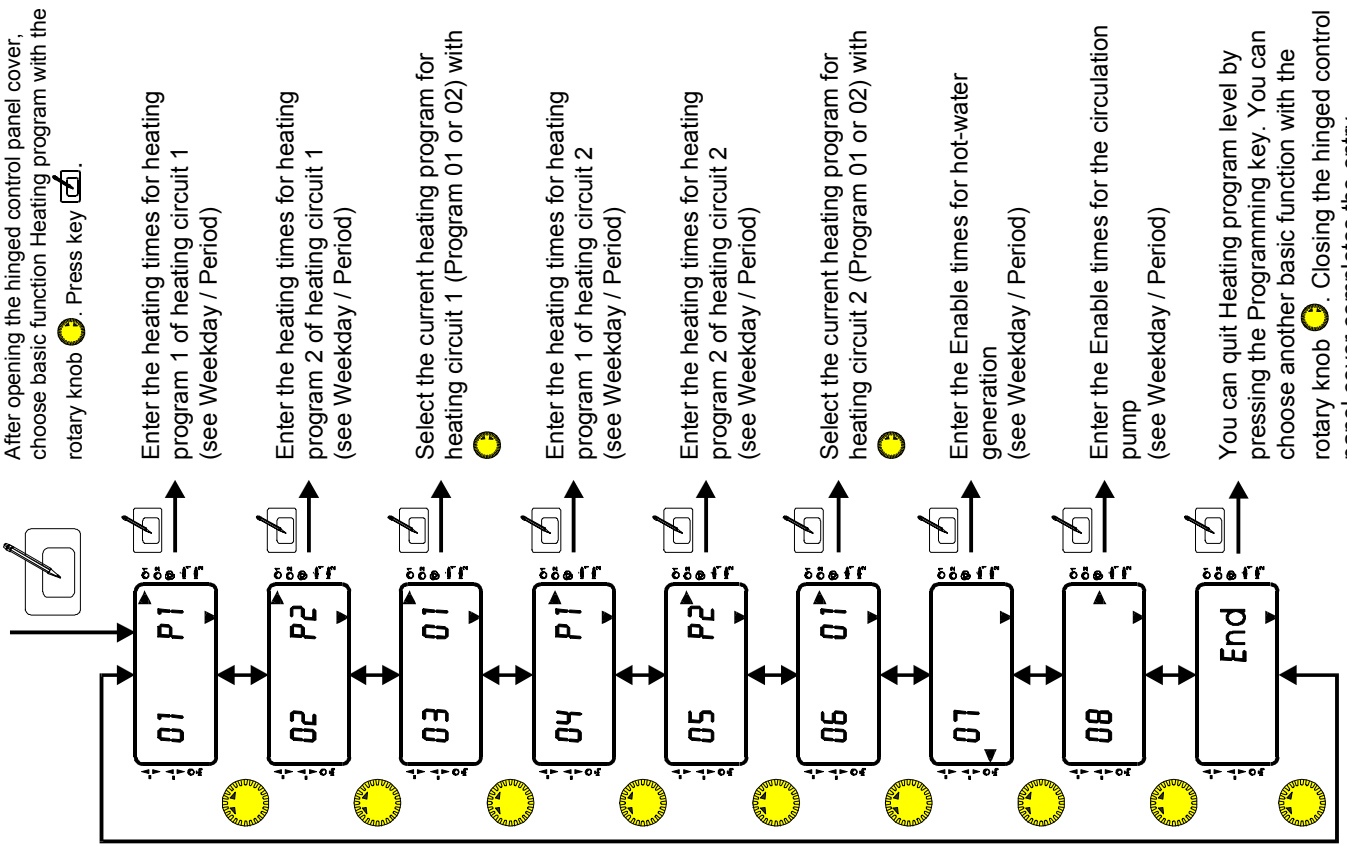

Weekday / Period level

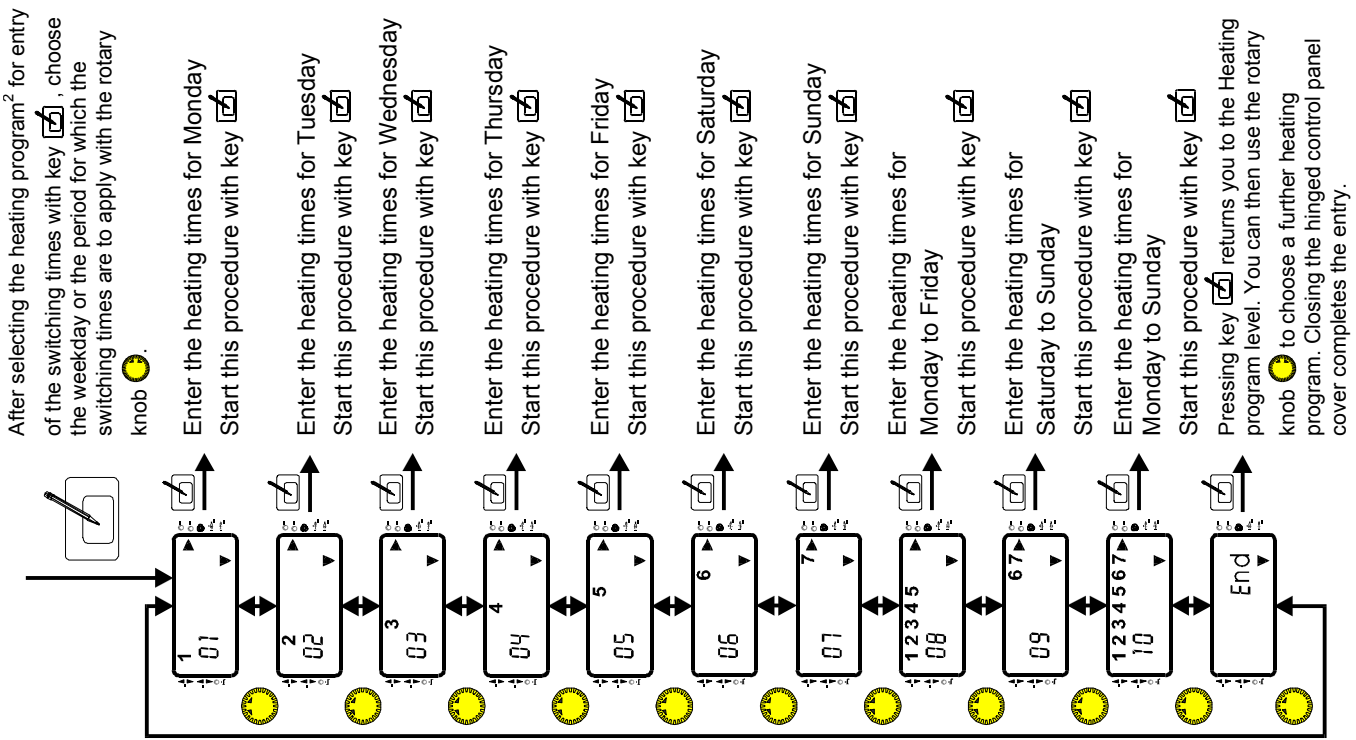

[2] *The heating circuit is indicated by the arrow pointing to the related pump symbol*

Switching times level

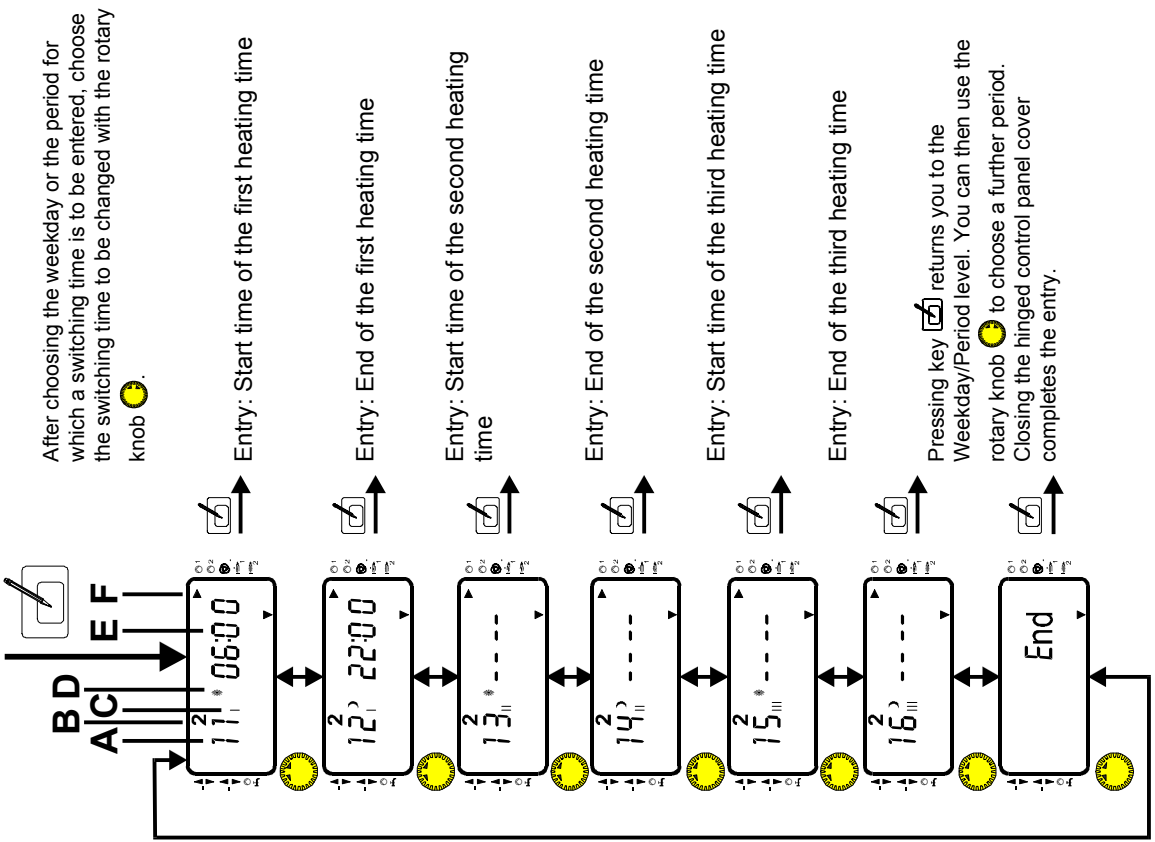

Heating circuit 1 -> Heating program 1

	Heating time 1		Heating time 2		Heating time 3	
No.	**11**	**12**	**13**	**14**	**15**	**16**
Mo	06:00	22:00	-	-	-	-
Pers						
Tu	06:00	22:00	-	-	-	-
Pers						
We	06:00	22:00	-	-	-	-
Pers						
Th	06:00	22:00	-	-	-	-
Pers						
Fr	06:00	22:00	-	-	-	-
Pers						
Sa	07:00	23:00	-	-	-	-
Pers						
Su	07:00	23:00	-	-	-	-
Pers						

Condition as delivered and table for current values (please enter)!

Heating circuit 1 -> Heating program 2

	Heating time 1		Heating time 2		Heating time 3	
No.	**21**	**22**	**23**	**24**	**25**	**26**
Mo	06:00	08:00	16:00	22:00	-	-
Pers						
Tu	06:00	08:00	16:00	22:00	-	-
Pers						
We	06:00	08:00	16:00	22:00	-	-
Pers						
Th	06:00	08:00	16:00	22:00	-	-
Pers						
Fr	06:00	08:00	16:00	22:00	-	-
Pers						
Sa	07:00	23:00	-	-	-	-
Pers						
Su	07:00	23:00	-	-	-	-
Pers						

Hot-water program

	Heating time 1		Heating time 2	
No.	**01**	**02**	**03**	**04**
Mo	05:00	21:00	-	-
Pers				
Tu	05:00	21:00	-	-
Pers				
We	05:00	21:00	-	-
Pers				
Th	05:00	21:00	-	-
Pers				
Fr	05:00	21:00	-	-
Pers				
Sa	06:00	22:00	-	-
Pers				
Su	06:00	22:00	-	-
Pers				

Circulation pump

	Heating time 1		Heating time 2	
No.	**01**	**02**	**03**	**04**
Mo	05:00	21:00	-	-
Pers				
Tu	05:00	21:00	-	-
Pers				
We	05:00	21:00	-	-
Pers				
Th	05:00	21:00	-	-
Pers				
Fr	05:00	21:00	-	-
Pers				
Sa	06:00	22:00	-	-
Pers				
Su	06:00	22:00	-	-
Pers				

Heating circuit 2 -> Heating program 1

	Heating time 1		Heating time 2		Heating time 3	
No.	**11**	**12**	**13**	**14**	**15**	**16**
Mo	06:00	22:00	-	-	-	-
Pers						
Tu	06:00	22:00	-	-	-	-
Pers						
We	06:00	22:00	-	-	-	-
Pers						
Th	06:00	22:00	-	-	-	-
Pers						
Fr	06:00	22:00	-	-	-	-
Pers						
Sa	07:00	23:00	-	-	-	-
Pers						
Su	07:00	23:00	-	-	-	-
Pers						

Heating circuit 2 -> Heating program 2

	Heating time 1		Heating time 2		Heating time 3	
No.	**21**	**22**	**23**	**24**	**25**	**26**
Mo	06:00	08:00	16:00	22:00	-	-
Pers						
Tu	06:00	08:00	16:00	22:00	-	-
Pers						
We	06:00	08:00	16:00	22:00	-	-
Pers						
Th	06:00	08:00	16:00	22:00	-	-
Pers						
Fr	06:00	08:00	16:00	22:00	-	-
Pers						
Sa	07:00	23:00	-	-	-	-
Pers						
Su	07:00	23:00	-	-	-	-
Pers						

Condition as delivered and table for current values (please enter)!

Settings at Parameter level

Operating mode

1) Open hinged control panel cover
   => Info mode.

2) Choose basic function Parameter list with rotary knob.
   (See down arrow indicator).

3) Enter level with key.
   Display: Parameter number and current setting.

4) Choose sought setting with rotary knob
   Table: "Parameter list".

5) Press key
   (red lamp lights).

6) Change setting with rotary knob.

7) Save new setting with key
   (red lamp goes out).
   Close hinged control panel cover.

Operating example: One-off hot water

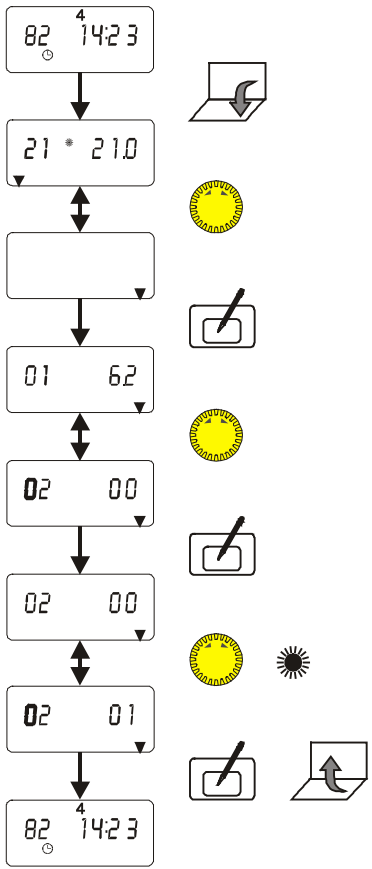

Parameter list				
Parameter	Designation	Setting range	Default	System values
01	Outside temperature		Display only	
02	One-off hot-water generation	0/1 (Off/On)	0	
03	Desired flow temperature, heating circuit 1		Display only	
04	Actual flow temperature, heating circuit 1		Display only	
05	Desired flow temperature, heating circuit 2		Display only	
06	Actual flow temperature, heating circuit 2		Display only	
07	Desired boiler temperature		Display only	
08	Actual boiler temperature		Display only	
09	Room sensor influence, heating circuit 1	----, 0-20	0	
10	Room sensor influence, heating circuit 2	----, 0-20	0	
11	Room temperature-controlled heating optimisation, heating circuit 1	0/1 (Off/On)	0	
12	Room temperature-controlled heating optimisation, heating circuit 2	0/1 (Off/On)	0	
13	Maximum time advance	0-3 hours	2 hours	
14	Time-controlled relay with hot-water enable	0/1 (Off/On)	0	
15	Outside temperature delay	0-3 hours	0 hours	

Flow resp. boiler temperature

In the case of temperatures, a distinction is made between the actual measured temperatures in the heating system and the pre-set or computed, desired temperatures necessary for heating. The flow temperature is the temperature of the water flowing to the radiators of a heating circuit. It is regulated by the mixers of the heating circuits, if present. The boiler temperature is measured directly in the boiler. The desired temperature of the boiler corresponds to the maximum computed flow temperature in the heating system plus the adjustable heat slope offset for mixer circuits.

Frost-protection control

Frost-protection control prevents the heating system freezing up by automatically activating Heating mode (switch-on temperature = see parameter list). In Frost-protection mode, the desired room temperature for all heating circuits is set to 5°C and the desired temperature for hot-water generation is set to 10°C.

Weather-dependent control

The boiler or flow temperature is determined by the **outside temperature**, the set heat slope and the set desired room temperature.
Exact setting of the heat slope is extremely important for weather-dependent control.
The circulation pump is controlled weather-dependently. The circulation pump is switched on if there is a heating demand and in Frost-protection mode.

Room sensor influence

The current room temperature can be included in computation of the required flow temperature by means of an existing room temperature sensor.
The influence factor can be set between 0 (purely weather-dependent control) and 20 (room temperature control with slight outside temperature influence). In setting "--", room temperature control is deactivated. Settings "--" and "0" feature differences for demand-dependent circulation pump control.

Room temperature

The required room temperature for Heating mode can be programmed at this point. Room temperature 1 is assigned to the first heating circuit of the controller and room temperature 2 is assigned to the second heating circuit. The entered value is required for computing the flow temperature of the heating circuits. If a remote control system with room sensor is connected, the current temperature of the assigned reference room is shown on the display (left). It can be used for controlling the room temperature on the basis of the room sensor influence. If there is no room sensor in the heating circuit, you will see two dashes [--] in the corresponding display.

Reduced temperature

The reduced or economy temperature is the temperature to which the heating circuit is controlled during times other than the heating times, e.g. during the nighttime or in ECO mode.

Hot-water generation

The programmed hot-water temperature is stabilised by switching the hot-water cylinder charging pump and the burner.

One-off hot water

Activating this function (parameter 02) means that the hot-water cylinder tank is heated precisely once (e.g. in order to shower during the reduced time).

Heat slope

The heat slope indicates what flow temperatures occur at specific outside temperatures.
The heat slope is dependent on the design of the heating system. The gradient of the heat slope indicates by how many degrees the flow temperature changes if the outside temperature rises or drops by 1K.
Setting 0 = Pure room control

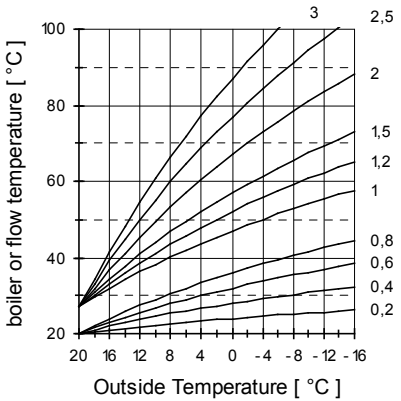

Heat slope diagram

Note on setting

- If the room temperature drops with dropping outside temperature, the gradient is set too low.
- If the room temperature increases with dropping outside temperature, the gradient is set too high.

The heat slope can best be set at outside temperatures below 5°C. The change in heat slope setting must be made in small steps and at long intervals (min. 5 to 6 hours) because the system must first adjust to the new values each time the heat slope is changed.

Guideline values

- Underfloor heating S = 0.4 to 0.6
- Radiator heating S = 1.0 to 1.5

! Correct setting of the heat slope is very important in the case of control systems without room sensor influence.

Holiday

You can use the controller's Holiday program during the holiday period. The duration of the holiday is entered in days. The Holiday program is always activated at 12.00 hours and always ends at 24.00 hours of the last day of the holiday.

! If the holiday period is entered before 12.00 hours, the Holiday program stops on the day of entry. If it is entered after 12.00 hours, the program starts on the next day at 12.00 hours. It thus also ends one day later.

The controller switches to Standby mode during the holiday. The Holiday symbol is shown on the display. Holiday mode can be terminated by operating the Program switch.

Heating program

The operation-control module allows entry of 2 heating programs for each heating circuit.

Each heating program comprises 3 heating times for each weekday. The heating times are defined by pairs of switching times, consisting of switch-on time and reduced operation time. This allows you to save two different heating profiles (Holiday/Working time, Early/Late shift). The current heating programs can be selected using parameters 03 and 06 at Heating program level.

Moreover, it is possible to program a time program for activating hot-water generation (07) and the circulation pump (08). These programs each contain two Enable times for each day. The circulation pump can also be switched via parameter 14 at Parameter level with the hot-water enable times.

Warm-up optimisation

Warm-up optimisation determines the optimum time advance of start of heating. The computation can be carried out as a function of the outside temperature or as a function of the current room temperature at the instant of maximum time advance. Warm-up optimisation occurs only if the reduced time of the heating circuit is at least 6 hours. The Time advance function ensures that the heated rooms have reached their desired temperature at the switch-on instants of the heating times.

Maximum time advance

The maximum possible time advance of start of heating by the Optimisation function can be defined system-specifically by the user (parameter 13).

0 = No warm-up optimisation!

Circulation pump control

Demand-dependent circulation pump control switches the circulation pump off if there is no heating demand. The mixers are closed at the same time.

Conditions for switch-off:

Room temperature-dependent control

The room temperature exceeds the set desired temperature.

Weather-dependent control

The outside temperature exceeds the desired room temperature.
The desired flow temperature is less than 20°C.

! In the case of room sensor influence "0", the pump operates continuously after one-off heating demand in the reduced time.

Outside temperature delay

The selected outside temperature delay must be matched to the type of construction of the building. In the case of heavy types of construction (thick walls), a long delay (3 hours) must be selected since a change in outside temperature affects the room temperature later accordingly. In the case of lightweight type of construction (prefabricated dwellings), no delay should be set (0 hours).

Delayed pump switch-off

In the case of switch-off of the circulation pumps, the circulation pumps are not switched off until 5 minutes later if the burner was on during the last 5 minutes before the switch-off instant.

Pump blocking protection

The controller effectively prevents blocking of the pumps if they are not switched on for long periods. The integrated protection function switches on all pumps which have not been in operation during the past 24 hours for one minute at 12.00 hours every day.

EEPROM check

Every 10 minutes, a check is conducted automatically in order to establish whether the settings of the controller lie within the specified limits. If a value is found to be out-of-range, it is substituted by the related default value. The range transgression is indicated by the blinking ⚠ and the error number 81.

In this case, the user should check the important settings of the controller. The warning symbol is cleared after the unit is restarted (RESET).

RESET-Function

If a fault or error occurs in the heating system, you will see a blinking warning triangle (⚠) and the related error number on the display. Please refer to the table below for the significance of the displayed error code. Frequently, an error can be remedied by performing a RESET on the unit. The RESET switch is located beneath the hinged operating panel. (see Parameter entry). The RESET switch can be operated using a small screwdriver.

RESET : Corresponds to brief switch-off of the unit. The controller then continues to operate with the set values.
RESET + ☑ : This overwrites all values with default values.
The additional key (☑) must be pressed when switching over from RESET (Manual) to Automatic mode.

Error number	Error designation	Significance
Mixer error		
E 70	Flow sensor defective	The flow sensor of a heating circuit is defective (discontinuity/short circuit).
Boiler error		
E 75	Outdoor sensor defective	The outdoor sensor is defective (discontinuity/short circuit).
E 76	Storage tank sensor defective	The storage tank sensor is defective (discontinuity/short circuit).
E 77	Boiler sensor defective	The boiler sensor is defective (discontinuity/short circuit).
E 79	Relay sensor defective	The temperature sensor for the additional relay is defective (discontinuity/short circuit).
Internal errors		
E 80	Room sensor defective	The room sensor of a heating circuit is defective (discontinuity/short circuit). In case of solar collector control, E80 may also indicate a defect of the storage tank sensor II.
E 81	EEPROM error	An error has occurred in the EEPROM -> Check parameter values!!!
Communication error		
E 90	ID 0 and 1 on bus	Bus IDs 0 and 1 may not be used simultaneously.
E 91	Bus ID used	The set bus ID is already in use by another device.

Technician level

(Parameter list as of number 20)

! It is not possible to set these parameters until after entering the code No.
Code No. entry = Parameter 20
Code ex-works: 1234

⚠ Settings at Technician level should always be made with the appropriate care since this level stores safety-related parameters!

⚠ When programming the parameters at Technician level, please follow the manuals for the connected devices. The technical manuals contain information and explanatory information on the parameters.

Changing the parameters

1) Open the hinged control panel cover
2) Choose basic function Parameter list with the rotary knob
3) Press key .
4) Choose parameter No. 20 with the rotary knob ➔

Enter the code No.

5) Press key
(red lamp lights).
6) Set the first digit with the rotary knob .
7) Press key
(red lamp lights).
8) Set the second digit with the rotary knob .
9) Press key
(red lamp lights).
10) Enter digits three and four accordingly (red lamp goes out).
11) Choose the required parameter with rotary knob (see list).
12) Press key
(red lamp lights).
13) Set the value with the rotary knob .
14) Save the value with key .

! Parameters which cannot be set on the controller owing to the system are identified by dashes [----] on the display or the parameters are masked. It may be possible to set these parameters on an operation-control module.

! The specified default values in the list below correspond to the condition of the unit as delivered. System-specific values can be entered in the last column of the table. This simplifies the task of recommissioning after a parameter RESET.

! If you press the Programming key and choose a protected parameter before entering the code No., parameter 20 (code scan) is displayed automatically.

Code No.-protected parameters at Technician level				
No.	Parameter	Setting range	Default	System values
20	Entry of code No.	0000-9999	----	
21	Code No.	0000-9999	1234	
22	Bus ID, heating circuit 1 (HK1)	0-15	0 resp. 1 (VFAS)	
23	Bus ID, heating circuit 2 (HK2)	0-15	2	
24	Frost-protection temperature	(-5)°C - (+5)°C	0°C	
25	Max. flow temperature, heating circuit 1	30°C - 110°C	80°C	
26	Max. flow temperature, heating circuit 2	30°C - 110°C	80°C	
27	Heat slope offset	5-50 K	5 K	
28	Function temperature-controlled relay (if no sensor is connected with setting 0, 1 or 3, the relay is switched with the time program for the circulation pump)	0-3 0: Temperature increase of return flow 1: Solid-fuel boiler 2: Header pump 3: Solar collector	0	
29	Switching temperature for relay (see 28)	10°C - 90°C	30°C*)	
30	Hysteresis for additional relay (see 28)	2 K - 20 K*)	5 K*)	
31	Charging pump relief	0/1 (Off/On)	1	
32	Parallel pump operation	0/1 (Off/On)	0	
33	Hot-water short-time heating	0/1 (Off/On)	0	
34	Outdoor sensor power supply	0/1 (Off/On)	1	

***)** In the case of control of a solar collector pump: Set parameter 29 to switch-off temperature (e.g. 90°C). The control hysteresis (parameter 30) can be set in the range 7-25 K in this case. The default value is 7 K.

Code No.-protected parameters at Technician level				
No.	Parameter	Setting range	Default	System values
Boiler parameters				
51	Maximum boiler temperature	30°C - 110°C	85°C	
52	Minimum boiler temperature	10°C - 85°C	40°C	
53	Temperature increase for hot water	0°C - 50°C	20°C	
54	Warm-up temperature	10°C - 85°C	35°C	
55	Constant minimum delimiter	0/1/2 (Off/On/permanent)	0	
56	Boiler hysteresis temperature (dynamic)	5-20 K	5 K	
57	Boiler hysteresis time (dynamic)	0-30 min.	10 min.	
58	Delay for 2nd burner	0-30 min.	0 (= 10 s)	
59	Fixed boiler control hysteresis II	2-20 K	2 K	
60	Hours until boiler sequence change	0-250 hours	0 (= no change)	
61	Burner starts, burner 1		Display only	
62	Burner operating time, burner 1		Display only	
63	Burner starts, burner 2		Display only	
64	Burner operating time, burner 2		Display only	
Mixer parameters				
71	Mixer running time 1 (rating plate, motor 1)	30-240 s	120 s	
72	Mixer running time 2 (rating plate, motor 2)	30-240 s	120 s	
Service				
81	Relay test	After configuration	see explanatory information	
82	Sensor test	After configuration	see explanatory information	
85	Software version		Display only	

Explanatory information

! Figures in the text correspond to parameter numbers (e.g. 24 = frost-protection temperature).

22+23 Bus ID

No. of the heating circuit
(see Chapter Bus ID).

24 Frost-protection temperature

If the outside temperature drops below the programmed value, the system switches to Frost-protection mode.

25+26 Max. flow temperature

Limitation of the flow temperature of the heating circuit serves to protect the downstream components (e.g. in the case of underfloor heating systems).

27 Heat slope offset

The desired boiler temperature is computed by adding the desired temperature of the maximum-demanding mixer circuit to the heat slope offset.

28 Relay function

0=>Temperature increase of return flow: If the actual temperature drops below the switching temperature (parameter 29), the pump for temperature increase of return flow is switched on. Switch-off occurs when the temperature exceeds the switching temperature (P29) by an amount equal to the switching hysteresis (P30).

1=>Solid-fuel boiler: The pump is switched on when the temperature of the main boiler drops below the temperature of the solid-fuel boiler by an amount equal to the hysteresis (P30). The pump is switched off when the temperature of the main boiler increases above the temperature of the solid-fuel boiler.

2=>Header pump: If a heat request is issued to the header (operation of at least one heating circuit pump), the header pump is switched on.

3=>Solar collector: If the collector temperature exceeds the storage tank temperature II by an amount equal to the hysteresis (P30), the collector pump is switched on. Upper switch-off occurs when the storage tank temperature II is greater than the switching temperature (P29). It is switched back on again when the storage tank temperature II drops 5 K below the switching temperature (P29). Switch-off occurs when the collector temperature drops by more than 5 K below the temperature (storage tank temperature II + P30).

If the related sensor is not connected in the case of setting 0, 1 or 3, the relay is switched with the time program for the circulation pump.

29 Switching temperature for additional relay

See Parameter 28.

30 Hysteresis for additional relay

See Parameter 28.

31 Charging pump relief

The charging pump is switched on when the boiler temperature exceeds the storage tank temperature by 5 K. Switch-off if boiler temperature < storage tank temperature or if storage tank temperature > desired temperature (+ delayed switch-off).

32 Parallel pump operation

The heating circuit pumps operate during hot-water generation.

33 Hot-water short-time heating

Heating of the storage tank temperature up to 60°C with every 20th heat-up operation or at least once per week on Saturday at 1.00 hours.

34 Outdoor sensor voltage

Switch-off of the power supply for the outdoor sensor. Switch-off allows operation of up to 5 controllers with only one outdoor sensor.

51 Maximum boiler temperature

Protects against boiler overheating / prevents triggering of the safety temperature delimiter.

52 Minimum boiler temperature

Prevents operation of the boiler in the condensation range. The boiler does not switch off until the minimum temperature + 5K is reached.

53 Temperature increase for hot water

Boiler temperature in the case of hot-water generation = desired hot-water temperature + temperature increase in the case of hot water (boiler temperature ≥ 70°C)

54 Warm-up temperature

This shortens operation in the condensation range. The circulation pumps are switched off and the mixers are closed until the boiler has reached the warm-up temperature.

55 Constant minimum delimiter

See Parameter 52!

ON: Burner constantly maintains the programmed minimum boiler temperature in the case of heat demand.

OFF: Burner is switched on on the basis of heat slope only in the case of heating demand.

24h: Burner constantly maintains the programmed minimum boiler temperature (24h a day).

56 Dynamic control hysteresis 1

For optimising the selected control hysteresis when subject to variable loading of the boiler. The set control hysteresis is reduced after switch-on of the burner in linear fashion within the hysteresis time (57) to the minimum control hysteresis of 5K. This means that the user-defined control hysteresis is operative in the case of low loading of the boiler (fast warm-up). Short running times and frequent on-off operation of the burner are effectively prevented. The hysteresis is reduced to 5K in the case of longer burner operation (high heating load). This avoids heat-up of the boiler to unnecessarily high temperatures. The energy consumption of the heating system is optimised.

57 Boiler hysteresis time

See Parameter 56.

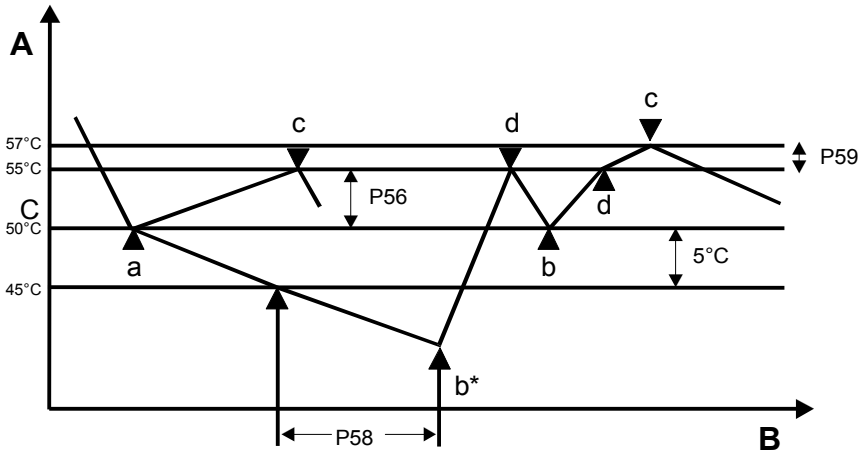

A Boiler temperature
B Time
C Desired boiler temperature

a Stage 1 on
b Stage 2 on
b* Enable, stage 2 (stage 2 on)
c Stage 1 off (cancellation of Enable, stage 2)
d Stage 2 off

P56 Dynamic control hysteresis 1
P58 Delay for stage 2
P59 Control hysteresis 2
58 Delay for 2nd burner

In the case of two-stage systems, the second burner stage is enabled at the earliest after expiry of the delay. The delay starts after each start of burner stage 1 if the actual temperature drops below the desired temperature by 5K.

59 Control hysteresis 2

Switch-off of the first burner stage after Enable of the second stage if boiler temperature = desired temperature + dynamic hysteresis 1 + hysteresis 2.

60 Hours until boiler sequence change

The controller can be operated optionally for heating systems with two-stage burners or for regulation of heating systems with 2 single-stage boilers. For 2-boiler operation, it is possible to reverse the boiler sequence after an adjustable number of operating hours of the current boiler "1".

61 + 63 Burner starts

Display of the burner starts.

The values can be reset by pressing the Programming key twice.

62 + 64 Burner operating time

Display of the burner operating times.

The values can be reset by pressing the Programming key twice.

71 + 72 Mixer running time

Control parameter (see rating plate on motor operator). Required time for complete opening of the mixer (in seconds).

81 Relay test

Activation by pressing the Programming key. The existing relays can be switched with the rotary knob (burner, pumps and mixers). On the display, an arrow points to the symbol of the switched relay (see Chapter Display)

01 Heating circuit 1: Mixer open
02 Heating circuit 1: Mixer closed
03 Heating circuit 2: Mixer open
04 Heating circuit 2: Mixer closed
05 Hot-water cylinder charging pump
06 Heating circuit pump 1
07 Heating circuit pump 2
08 Time-controlled relay
09 Burner stage 1 on
10 Burner stage 2 on
11 Temperature-controlled relay

82 Sensor test

Activation by pressing the Programming key. The existing sensors can be selected with the rotary knob. The parameter number of the current sensor and the measured temperature value are shown on the display. Non-configured sensors are identified by dashes on the display.

01 Outside temperature
02 Boiler temperature
03 Storage tank temperature
04 Flow temperature, heating circuit I
05 Room temperature, heating circuit I
06 Flow temperature, heating circuit II
07 Room temperature, heating circuit II
08 Temperature for control of the additional relay (e.g. temperature increase of return flow)
09 Storage tank temperature II (see additional relay for operation with solar installation)

85 Software version

Display of the unit's software version (please quote in the event of complaints or errors).

The heating installation system CXE

CXE is a modular system for control of heating installations which can be configured flexibly for an extremely wide variety of requirements with up to 15 heating circuits. The system's components, one boiler controller, up to 15 mixer modules and up to 15 operation-control modules, communicate via a bus system. This minimises the wiring effort. Use of the CAN bus has made it possible to implement a *Plug and Play* system. The various components are simply coupled to the system bus. The modules log on to the system automatically and search for their communication partners on the basis of the set bus ID.

! Heating controller E6.0631 can control heating systems with up to 14 heating circuits by cascading with up to 6 E6.1111 mixer modules.

Bus ID

The bus ID (0-15; parameters of Technician level) represents a numbering of the system's heating circuits. Each operation-control module and each mixer module receives the number of the assigned heating circuit as its bus ID.

! Heating circuit numbers (0-15) may not be assigned twice. The heating circuit numbers 0 and 1 may not be used simultaneously. A heating circuit with the number 0 has no mixer.

Default assignment

Heating circuit 1 as direct heating circuit ➔ 0 (Display: - - - -)
Heating circuit 1 as mixer circuit ➔ 1
Heating circuit 2 ➔ 2

! The heating system must be disconnected from the electrical power supply once after setting all bus IDs.

Operation-control module BM

The controller permits connection of an operation-control module BM for each heating circuit via a bus line. The operation-control module allows various operation-control functions and monitoring functions for the system values to be relocated to the main controlled zone – i.e. the living room. This achieves maximum comfort and convenience. Please refer to the technical description of the BM for a precise descrip-tion of the overall scope of functions.

- Display of the system parameters
- Entry of the heating circuit parameters
- 4 different desired room temperatures
- Entry of the holiday start day
- Automatic adaptation of the heat slope

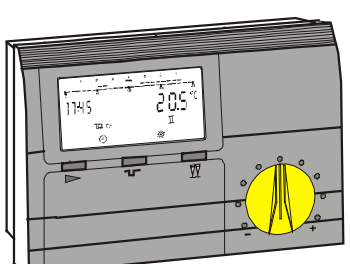

Remote control FBR1

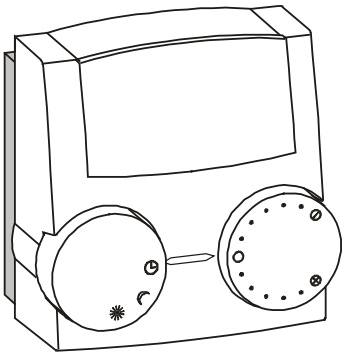

Rotary switch for changing the desired room temperature (±5K)

Rotary switch with settings
- ◷ Timer mode
- ☽ Constant Reduced mode
- ☼ Constant Normal mode

! The heating program switch on the controller must be set to ◷.

Installation location:
- In the heating circuit's main controlled zone (on an interior wall in the living room)
- Not near to radiators or other appliances emitting heat
- Any location if no room sensor influence is set

Installation:
Use a screwdriver to lever the cap off of the base.
Attach the base at the installation location.
Make the electrical connections.
Press the cap back on.

DCF receiver

Connection: Plug connector, Vil 1.2

The controller is equipped with a connection option for a DCF receiver.

When the DCF receiver is connected, the controller's clock is updated daily at 3:20 a.m. and also 5 minutes after switching on the power supply. As a result, the 6-monthly switchover between summer and winter time is dispensed with.

If the time is not automatically corrected from the specified time, select a different installation site for the DCF (e.g. another wall) and restart the controller (switch off the power supply briefly).

PC

The controller allows you to connect an IBM-compatible AT PC. The C*omfort-Soft* programming software runs under Windows 95 / Windows NT. This software allows you to set and scan all system-specific parameters. The parameters can be saved, displayed graphically and evaluated on the PC at predefined intervals.

Maximum delimiter

If a maximum delimiter is required, it must be connected between the pump of the heating circuit and the related relay terminal 4 resp. 5.

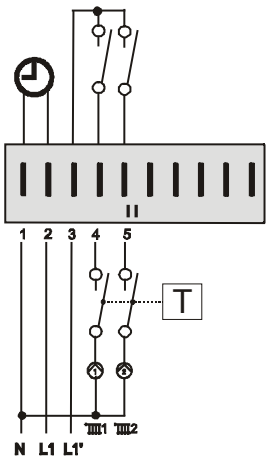

Telephone switch

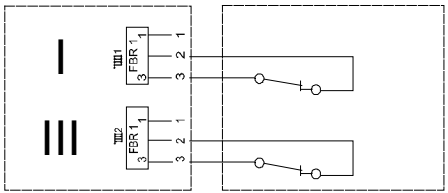

The heating system can be switched to Heating mode ✳ with a telephone switch. The connection terminals of the controller for the remote control FBR1 (see connection diagram) are used for installation. As soon as a short-circuit is detected at terminals 2 and 3 of the corresponding connector, the assigned heating circuit switches to Heating mode. In addition, hot-water preparation is activated. When the short-circuit is eliminated, the controller once again heats on the basis of the set heating program.

⚠ If the heating circuit is controlled remotely by an operation-control module BM, the telephone switch must be connected at the BM.

Outdoor sensor AFS

Installation location:

- Wherever possible, on a northerly or north-easterly wall behind a heated room
- Approx. 2.5 m above ground
- Not above windows or ventilation shafts

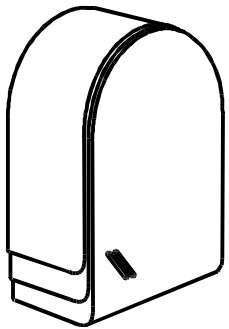

Installation:

Detach the cover.
Attach the sensor with the supplied screw.

Boiler sensor KFS

Installation location:

- Immersed sleeve for thermometer, temperature regulator and boiler sensor in heating boiler

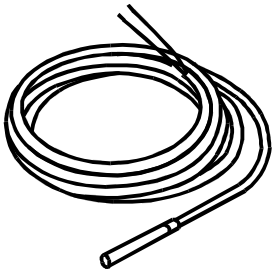

Installation:

- Slide the sensor fully into the existing immersed sleeve.

Flow sensor VFAS

Installation location:

- In the case of boiler control, in place of the boiler sensor KFS as close as possible behind the boiler on the heating flow pipe
- In the case of mixer operation approx. 0.5 m behind the circulation pump

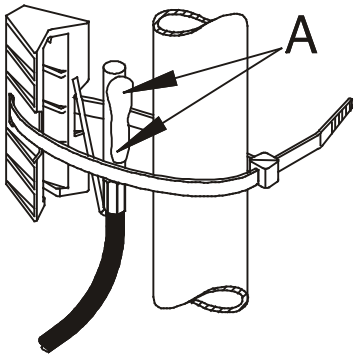

Installation:

Thoroughly clean the flow pipe.
Apply heat-conductive paste.(A)
Secure sensor with stretch band.

Storage tank sensor SPFS

Installation location:

- In the immersed pipe of the hot-water cylinder tank (generally on the front face of the tank)

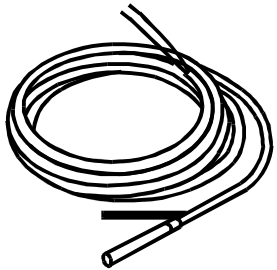

Installation:

- Slide the sensor as far as possible into the immersed pipe.

⚠ The immersed pipe must be dry.

Electrical connection

⚠ The controller is designed for an operating voltage of 230 V AC at 50 Hz. The burner contact is a floating contact and must always be connected in series with the mechanical boiler thermostat.

⚠ Important: Bus lines and sensor lines should be laid separately, away from mains cables!

! The controller must be switched off briefly (master switch / reset) after connection or after changing the connection of the sensors and remote controls. The function of the controller is reconfigured in accordance with the connected sensors the next time the controller is switched on.

System diagram

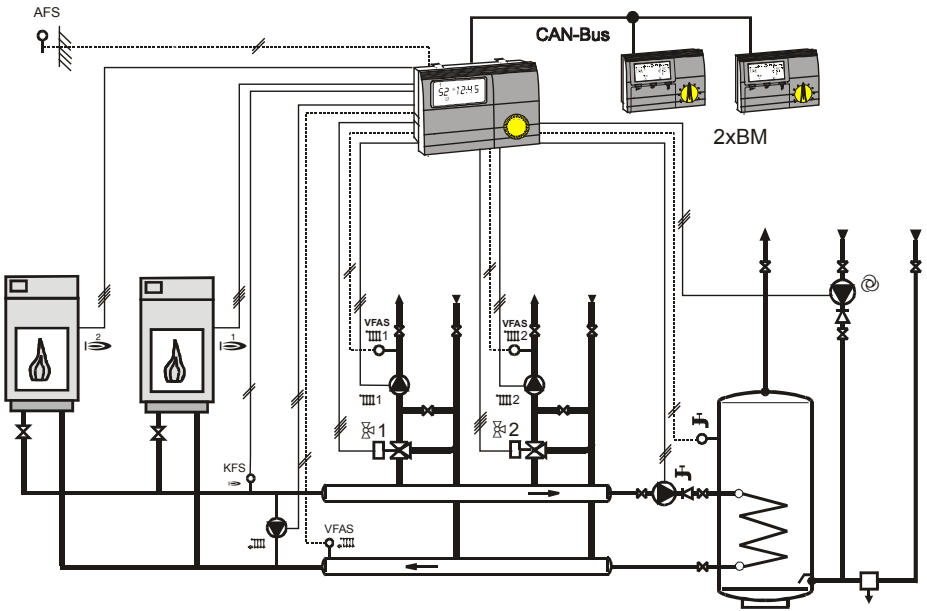

E6.0231/E6.0631

230 V AC

Switching capacity of relays 2(2) A, 250 V AC

Connection diagram

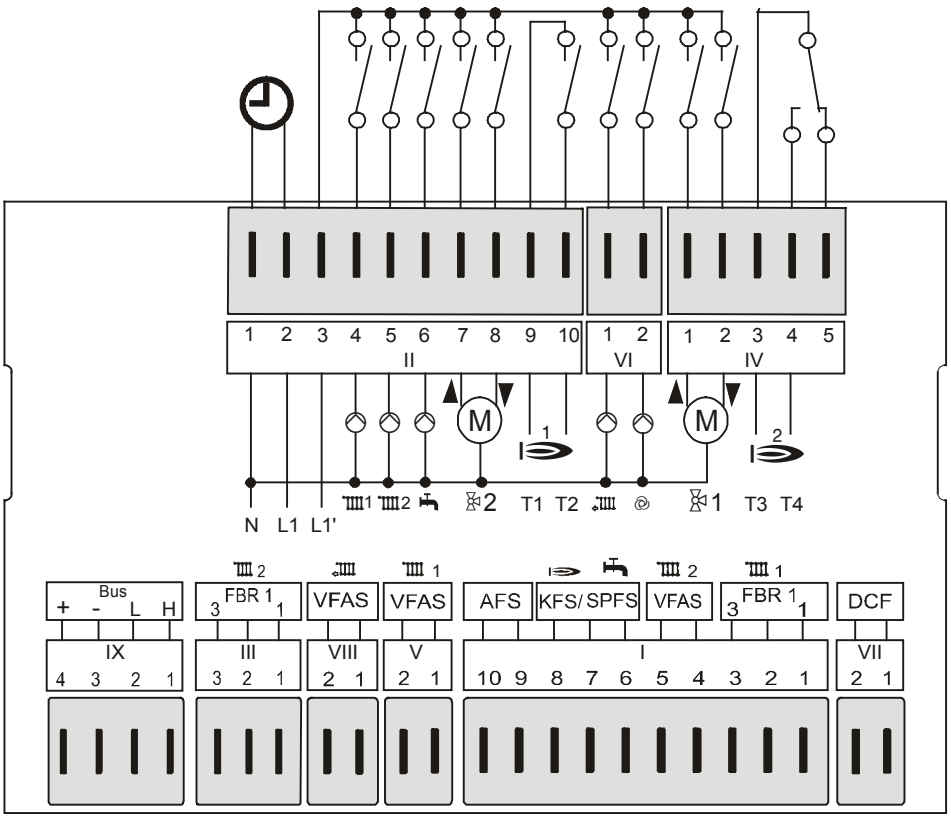

Terminal assignment

VII (1+2):	DCF antenna
I (1-3):	FBR1 for heating circuit 1
I (1+2):	Solar installation, storage tank sensor II
I (4+5):	Flow sensor, heating circuit 2
I (6+7):	Storage tank sensor
I (7+8):	Boiler sensor
I (9+10):	Outdoor sensor
V (1+2):	Flow sensor, heating circuit 1
VIII (1+2):	Sensor, additional relay
III (1-3):	FBR1 for heating circuit 2
IV (1+2):	Data line CAN bus
IV (3+4):	Power supply CAN bus
II (1):	Neutral conductor, mains
II (2):	Power supply, unit
II (3):	Power supply, relay
II (4):	Pump, heating circuit 1
II (5):	Pump, heating circuit 2
II (6):	Charging pump
II (7):	Mixer, heating circuit 2 open
II (8):	Mixer, heating circuit 2 closed
II (9+10):	Burner stage 1 / boiler 1
VI (1):	Additional relay (temperature)
VI (2):	Additional relay (time)
IV (1):	Mixer, heating circuit 1 open
IV (2):	Mixer, heating circuit 1 closed
IV (3+4):	Burner stage 2 / boiler 2

E6.0321

230 V AC

Switching capacity of relays 2(2) A, 250 V AC

Connection diagram

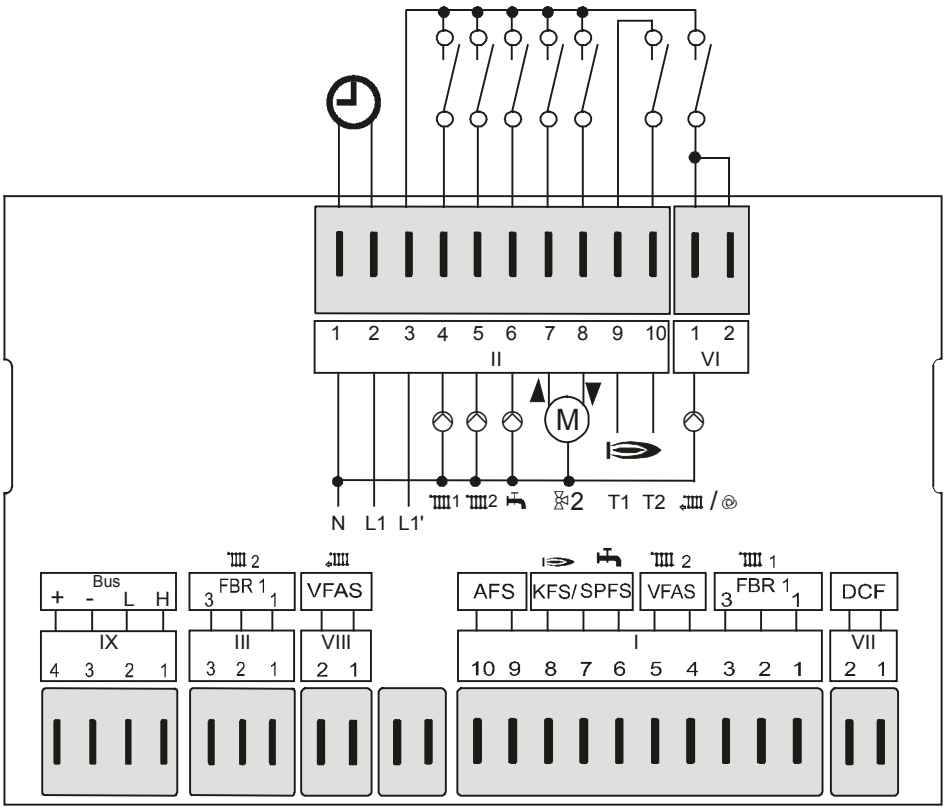

Terminal assignment

VII (1+2):	DCF antenna
I (1-3):	FBR1 direct heating circuit
I (1+2):	Solar installation, storage tank sensor II
I (4+5):	Flow sensor, mixer circuit
I (6+7):	Storage tank sensor
I (7+8):	Boiler sensor
I (9+10):	Outdoor sensor
VIII (1+2):	Sensor, additional relay
III (1-3):	FBR1 for mixer circuit
IV (1+2):	Data line CAN bus
IV (3+4):	Power supply CAN bus
II (1):	Neutral conductor, mains
II (2):	Power supply, unit
II (3):	Power supply, relay
II (4):	Boiler circuit pump
II (5):	Pump, mixer circuit
II (6):	Charging pump
II (7):	Mixer open
II (8):	Mixer closed
II (9+10):	Boiler/burner on
VI (1 / 2):	Additional relay (Temperature/Time)

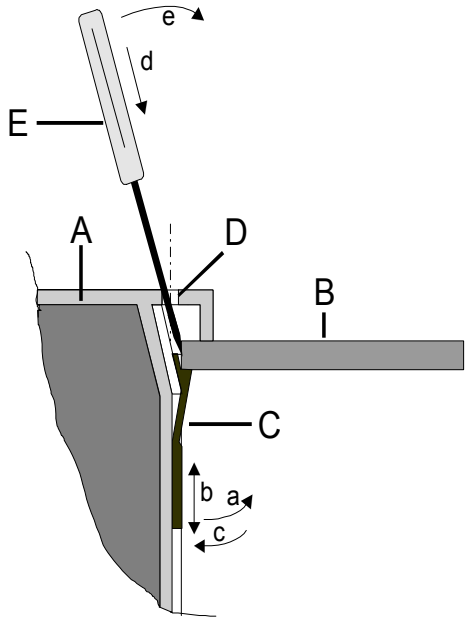

Sketch showing basic mode of operation:

A Controller, side view, cutaway view
B Control panel plate
C Mounting clamp
D Unlocking hole (see Chapter Parameter entry)
E Sharp-pointed tool

Installing the controller:

1. Set the mounting clamp to the wall thickness of the control panel (at the left and right-hand side of the unit):

a. Pull the mounting clamp at the bottom away from the controller wall (toothing).

b. In this condition, slide the mounting clamp down or up until the distance from the edge of the unit corresponds to the thickness of the control panel wall.
Detent position 1 ≅ 0.5-1.0 mm wall thickness
Detent position 5 ≅ 5.0 mm wall thickness

c. Press the mounting clamp against the controller wall at the bottom.

2. Press the controller into the control panel recess and check that it is firmly secure. If the controller wobbles: Remove the controller and move the mounting clamps up.

Removing the controller:

d. Insert a sharp-pointed tool at an angle with respect to the exterior wall into one of the unlocking holes (the tool must be slid between mounting clamp and control panel wall).

e. Lever the tool with respect to the unit exterior wall. This causes the mounting clamp to release the control panel wall.

Then slightly raise the unit at the corresponding side and repeat the procedure on the other side of the unit.

The unit can now be removed.

⚠ Disconnect the unit from the power supply before removing it.

Sensor resistances

The sensor resistances must be measured with the controller disconnected.

Temp.	AFS, VFAS, KFS, SPFS	FBR1 (terminals 1-2) ("Heating program" - switch set to ◔
−20°C	700 Ω	
−10°C	760 Ω	
0°C	830 Ω	
+10°C	900 Ω	680 Ω
+15°C	935 Ω	700 Ω
+20°C	970 Ω	720 Ω
+25°C	1010 Ω	740 Ω
+30°C	1050 Ω	760 Ω
+40°C	1130 Ω	
+50°C	1215 Ω	
+60°C	1300 Ω	
+70°C	1390 Ω	
+80°C	1485 Ω	
+90°C	1585 Ω	

Technical data

Supply voltage to IEC 38	230 V AC ± 10%
Power consumption	Max. 8 VA
Switching capacity of the relays	250 V 2(2) A
Maximum current on terminal L1'	10 A
Enclosure to EN 60529	IP 40
Safety class to EN 60730	II; Totally insulated
Control panel installation to DIN 43700	Recess 138x92
Power reserve of the timer	> 10 hours
Permitted ambient temperature during operation	0 to 50°C
Permitted ambient temperature for storage	-30 to 60°C
Sensor resistances	Test resistance 1010 Ω ± 1% at 25°C

Malfunctions attributable to incorrect operation or setting are not covered by warranty.

CC/V 0203 6.6701.093-03 Printed in Germany Änderungen vorbehalten