Relief Valves for Gas & Cryogenic Systems
9400 Series Brass or Stainless Steel, Non-ASME

Application

These relief valves are specifically designed for thermal safety relief applications and cryogenic liquid containers.

Features

- All valves are cleaned and packaged for oxygen service per CGA G-4.1.
- Bubble tight at 95% of set pressure.
- Easy to read color coded psig / bar labels.
- Adapters provide standard pipe thread connections for venting gas to the outdoors.
- Repeatable performance.
- 100% factory tested.
- Temperatures Range -320° to +165° F.

Materials SS Style

Body	Stainless Steel
Spring	Stainless Steel
Seat Retainer	Stainless Steel
Adjusting Screw	Stainless Steel
Pipe-Away Adapter	Stainless Steel

Materials PRV and B-Style

Body	Brass
Spring	Stainless Steel
Seat Retainer	Brass
Adjusting Screw	Brass
Pipe-Away Adapter	Brass

Flow Performance

- PRV and SS style flow at 0.783 SCFM Air/PSIA at 110% of set pressure.
- B-9425N has a flow of 6.7 SCFM Air/PSIA at 120% of set pressure.
- B-9426N has a flow of 11.0 SCFM Air/PSIA at 120% of set pressure

Seat Material Option

F for Fluorosilicone for PRV and SS styles for 15-139psi.
T for PTFE for PRV and SS styles for 140-600psi
N for B-9425 and B-9426, Fluorosilicone seat, all set pressures.

Drain Hole Option

Relief valves without pipeaway typically provided with drain holes, leave blank. **P** - for relief valves without drain hole, for example PRV9432TP350

WARNING: Inspection and maintenance of pressure relief valves is very important. Failure to properly inspect and maintain pressure relief valves could result in personal injuries or property damage. The useful safe service life of a pressure relief valve may be significantly affected by the service environment.

Ordering Information

Fill in the blanks with options below.

Example: PRV9432T350

PRV	9432	T	Blank or "P"	350	Blank or "P"
Style	Size	Seat Material	Drain Hole	Set Pressure	Pipe Away Option

This example part number indicates a ¼" M.NPT PRV style brass relief valve with PTFE seat, set at 350 PSIG with drain hole and no pipe away adapter.

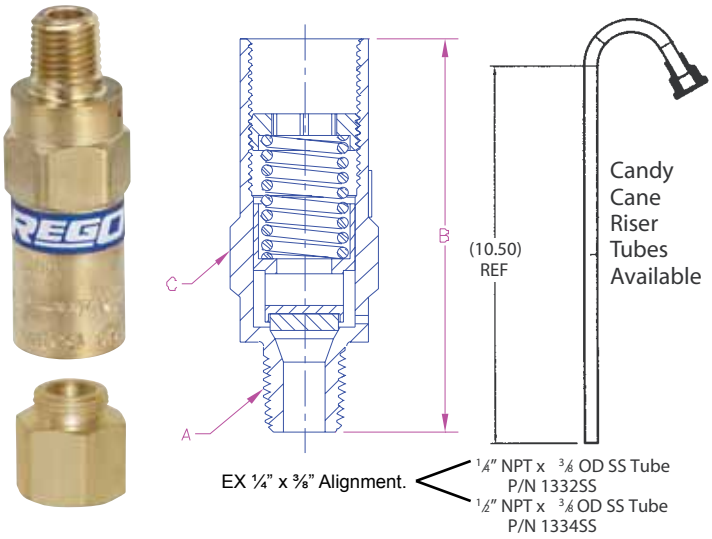

Set Pressure

Specify set pressure within range specified for style and size. The B-9425 & B-9426N are available in select settings only. Special order.

Pipe Away Option

P Pipeaway included and attached, No drain hole in relief valve.
For example PRV9432TP350P
Leave blank for relief valve without pipe-away attached.
For example PRV9432TP 350.

For easy identification, the following standard settings have color coded labels for all PRV and SS Style sizes and settings marked in PSIG and bar:

Color Identification

22 psig	yellow	230 psig	blue
35 psig	purple	350 psig	orange
50 psig	white	450 psig	pink
100 psig	gray	500 psig	light blue
150 psig	red		

Ordering Information

Style	Size	Inlet M.NPT A	Body and Valve Material	Pressure Setting Range PSIG	Height B	Wrenching Hex C	Orifice Size Sq. Inch	Pipe-Away Adapter P/N	Pipe-Away Outlet F.N.P.T.
PRV	9432	¼"	Brass	17-600	2.6"	⅞"	.062	B-9412-2	⅜"
SS	9432	¼"	Stainless Steel	17-600	2.6"	⅞"	.062	SS-9412-4	½"
PRV	9433	⅜"	Brass	17-600	2.6"	⅞"	.062	B-9412-2	⅜"
SS	9433	⅜"	Stainless Steel	17-600	2.6"	⅞"	.062	SS-9412-4	½"
PRV	9434	½"	Brass	17-600	2.8"	⅞"	.062	B-9412-4	½"
SS	9434	½"	Stainless Steel	17-600	2.8"	⅞"	.062	SS-9412-4	½"
B-	9425	¾"	Brass	50-300	3.4"	1¾"	.43	B-3131-10	1"
B-	9426	1"	Brass	100-300	5.5"	2⅜"	.62	B-3132-10	1¼"

GODDARD REGO